Metropole Countertop washbasin 100 cm-matt black

Product Code: 7529B001-0937

Technical Specifications

Brand	VitrA
Colour	Matt white
Series	Metropole

VitrA UK
Phone: +44 (0) 1235 750990 - info@vitra.co.uk
https://www.vitra.co.uk/ https://www.instagram.com/vitrabathroomsuk/

Metropole Countertop washbasin 100 cm-matt black

Product Code: 7529B001-0937
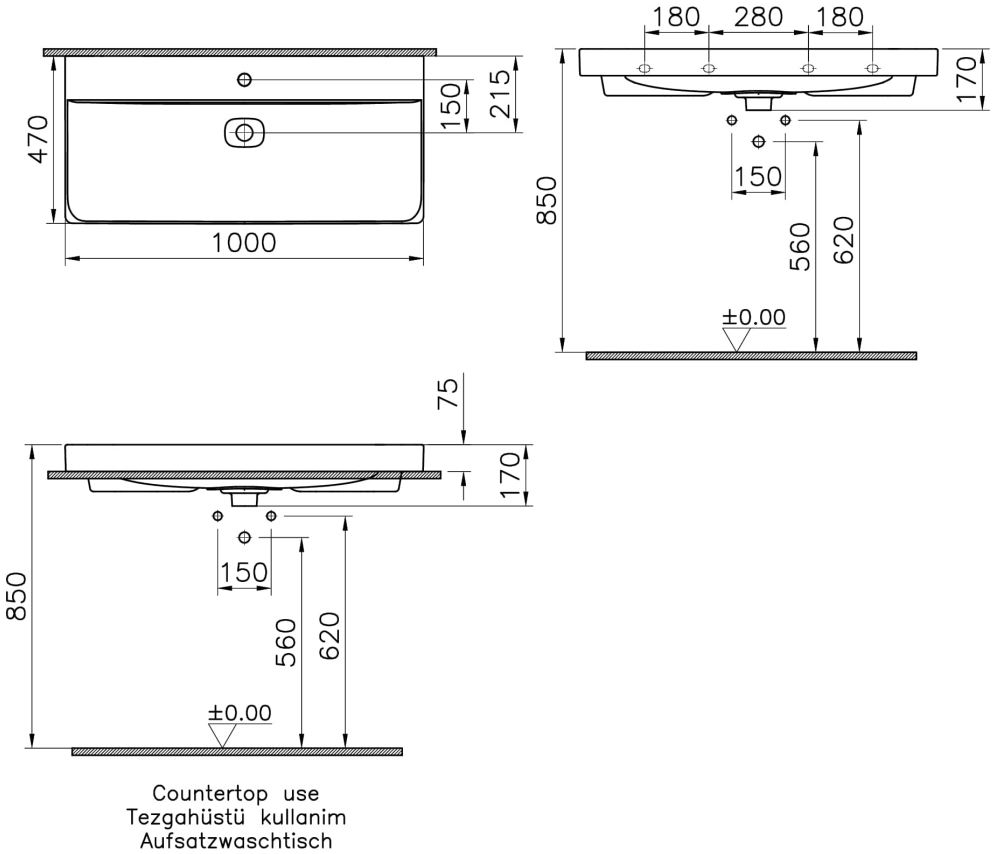
2A Technical Drawing