Metropole Washbasin 50 cm-matt black

Product Code: 7525B001-0041

Technical Specifications

Brand	VitrA
Colour	Matt white
Series	Metropole

VitrA UK
Phone: +44 (0) 1235 750990 - info@vitra.co.uk
https://www.vitra.co.uk/ https://www.instagram.com/vitrabathroomsuk/

Metropole Washbasin 50 cm-matt black

Product Code: 7525B001-0041

2A Technical Drawing

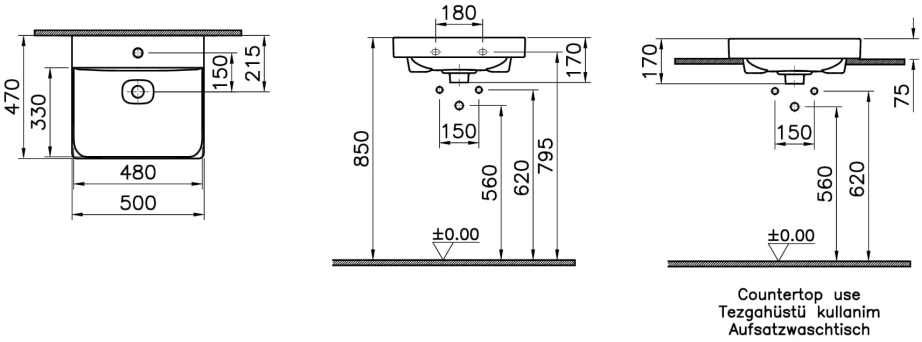

VitrA UK
Phone: +44 (0) 1235 750990 - info@vitra.co.uk
https://www.vitra.co.uk/ https://www.instagram.com/vitrabathroomsuk/