VitrA

Root Fla WBU,door,60cm,FS,Anth.,noWb

Product Code: 67904

Collection:

Technical Specifications

Body Color	Anthracite High Gloss
Body Material	MDF
Brand	VitrA
Color	Anthracite High Gloss
Color Group	Anthracite High Gloss
Connection Type	Suspended
Depth (mm)	449
Designer	VitrA Design Team
Dimensions	60
Door Option	2 Doors
Front Color	Anthracite High Gloss
Front Material	MDF

VitrA

Root Fla WBU,door,60cm,FS,Anth.,noWb

Product Code: 67904

Handle	Root Bar Handle
Handle Material	Zamak
Height (mm)	834
Included Basin Code	0
LED Lighting	No
Leg Option	No
Material	PET
Number of Doors	2
Online VitrA	false
Packaged Dimensions (W×D×H)	614 x 499 x 884
Siphon	Syphon Included
Siphon Cut-out	No
Soft Close	Yes
Washbasin Type	Compatible with vanity basin
Width (mm)	564

Root Fla WBU,door,60cm,FS,Anth.,noWb

Product Code: 67904
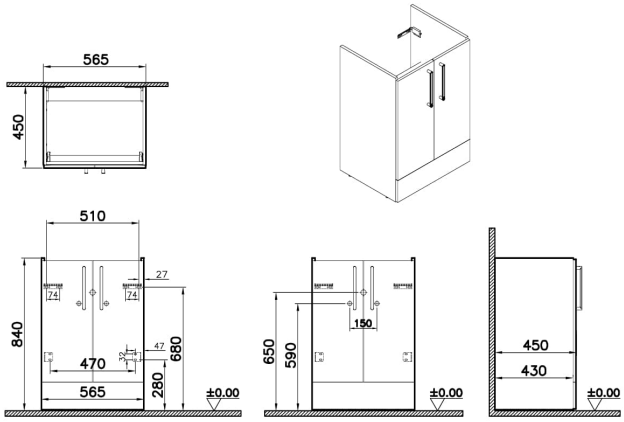
2A Technical Drawing