VitrA

Root Fla WBU,door,60cm,comp,Wanut,noWb

Product Code: 67840

Collection:

Technical Specifications

Body Color	Walnut
Body Material	MDF
Brand	VitrA
Color	Walnut
Color Group	Walnut
Connection Type	Suspended
Depth (mm)	371
Designer	VitrA Design Team
Dimensions	60
Door Option	2 Doors
Front Color	Walnut
Front Material	MDF

VitrA

Root Fla WBU,door,60cm,comp,Wanut,noWb

Product Code: 67840

Handle	Root Bar Handle
Handle Material	Zamak
Height (mm)	545
Included Basin Code	0
LED Lighting	No
Leg Option	No
Material	Melamine
Number of Doors	2
Online VitrA	false
Packaged Dimensions (W×D×H)	614 x 421 x 595
Siphon	Syphon Included
Siphon Cut-out	No
Soft Close	Yes
Washbasin Type	Compatible with vanity basin
Width (mm)	564

Root Fla WBU,door,60cm,comp,Wanut,noWb

Product Code: 67840
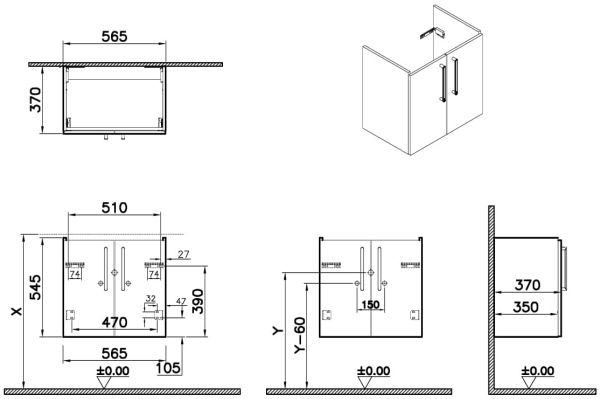
2A Technical Drawing