VitrA

Equal Lower Unit,80cm,P.B.Oak

Product Code: 64109

Collection: Equal

Technical Specifications

Body Color	Patterned Black Oak
Body Material	MDF
Brand	VitrA
Color	Patterned Black Oak
Color Group	VALUE: Patterned Black Oak
Colour	Patterned Black Oak
Connection Type	With Pedestal
Depth (mm)	421
Designer	Claudio Bellini
Dimensions	80
Drawer/Door Option	1 drawer
Front Color	Patterned Black Oak

VitrA

Equal Lower Unit,80cm,P.B.Oak

Product Code: 64109

Front Material	MDF
Full Extension	Yes
Handle	Without handle
Height (mm)	446
LED Lighting	No
Leg Material	Metal
Leg Option	Yes
Material	PVC
Number of Doors	1
Online VitrA	false
Packaged Dimensions (W×D×H)	882 x 471 x 496
Series	Equal
Soft Close	Yes
Width (mm)	832

Equal Lower Unit,80cm,P.B.Oak

Product Code: 64109
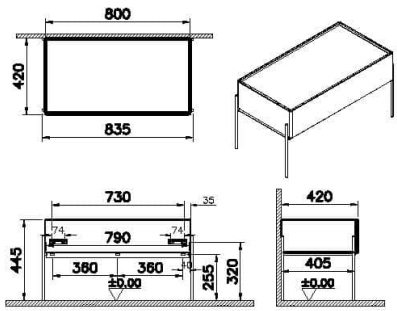
2A Technical Drawing