Outline Bowl - Pebble

Product Code: 5991B403-0016

Technical Specifications

Brand	VitrA
Colour	White
Series	Outline

VitrA UK
Phone: +44 (0) 1235 750990 - info@vitra.co.uk
https://www.vitra.co.uk/ https://www.instagram.com/vitrabathroomsuk/

Outline Bowl - Pebble

Product Code: 5991B403-0016

2A Technical Drawing

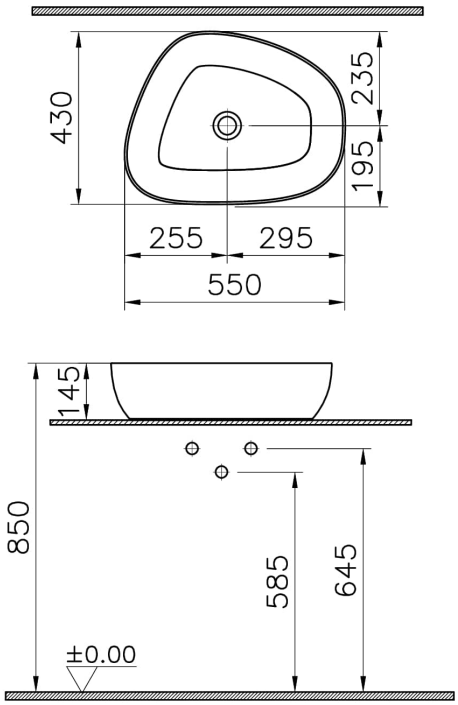

VitrA UK
Phone: +44 (0) 1235 750990 - info@vitra.co.uk
https://www.vitra.co.uk/ https://www.instagram.com/vitrabathroomsuk/