Origin

VirrA

Silent gracefulness

Origin portrays a delicate minimalism. The collection differentiates from the ordinary with its simple slenderness: Precise edges, fine details, and noble colours. By challenging the existing perception of faucets and accessories, Origin offers an integrated and charming final touch to the bathroom.

Origin

Design Studio VitrA

Authentic completeness

To enhance the bathroom environment, Origin is in complete harmony across collections. With the sculptural design character, this range of over 150 products quietly adapts to diverse needs and reveals an authenticity for different bathrooms.

Origin

Design Studio VitrA

Amplified yet subtle details

Origin’s delicacy is empowered by the industrial craftsmanship and strengthened by the fine details. In addition, the diverse colour palette includes chrome, copper, matt black and brushed nickel.

Origin

Design Studio VitrA

Origin as an authentic system

Origin

Design Studio VitrA

Different colours

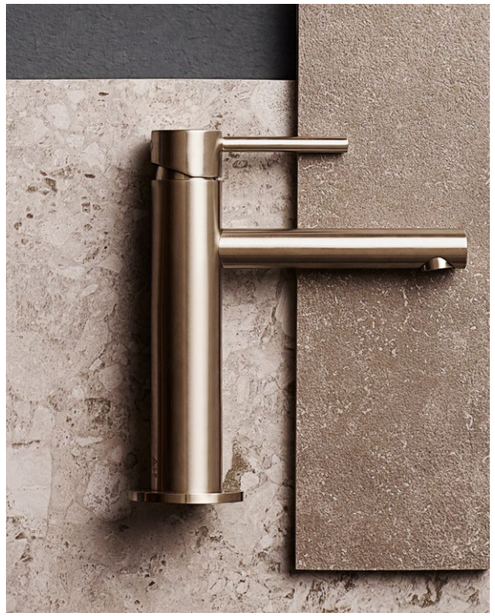

Different heights

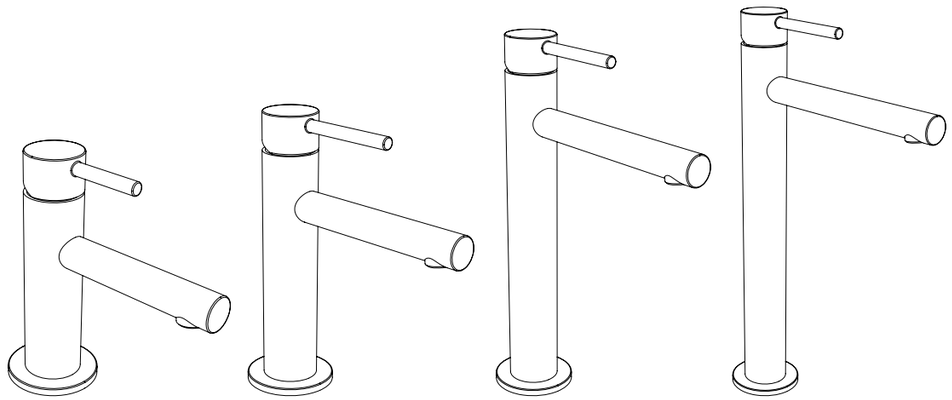

Different types of basin mixers

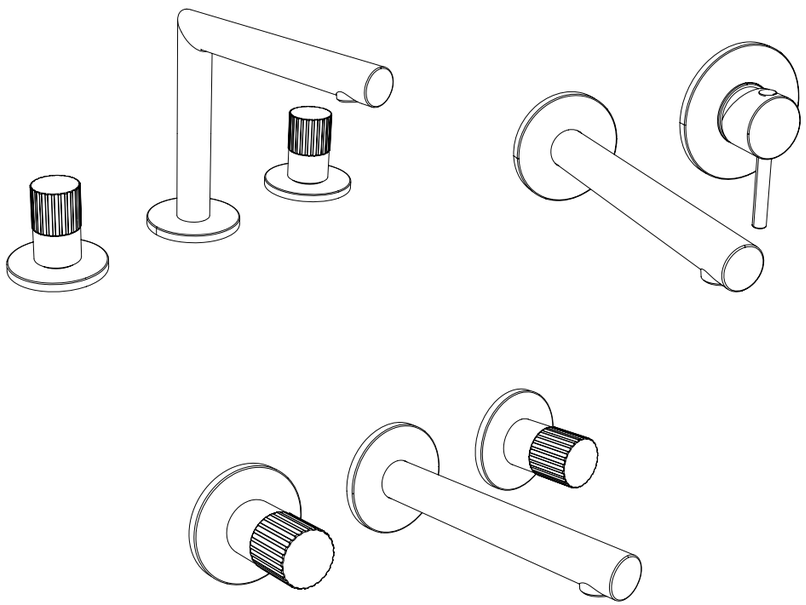

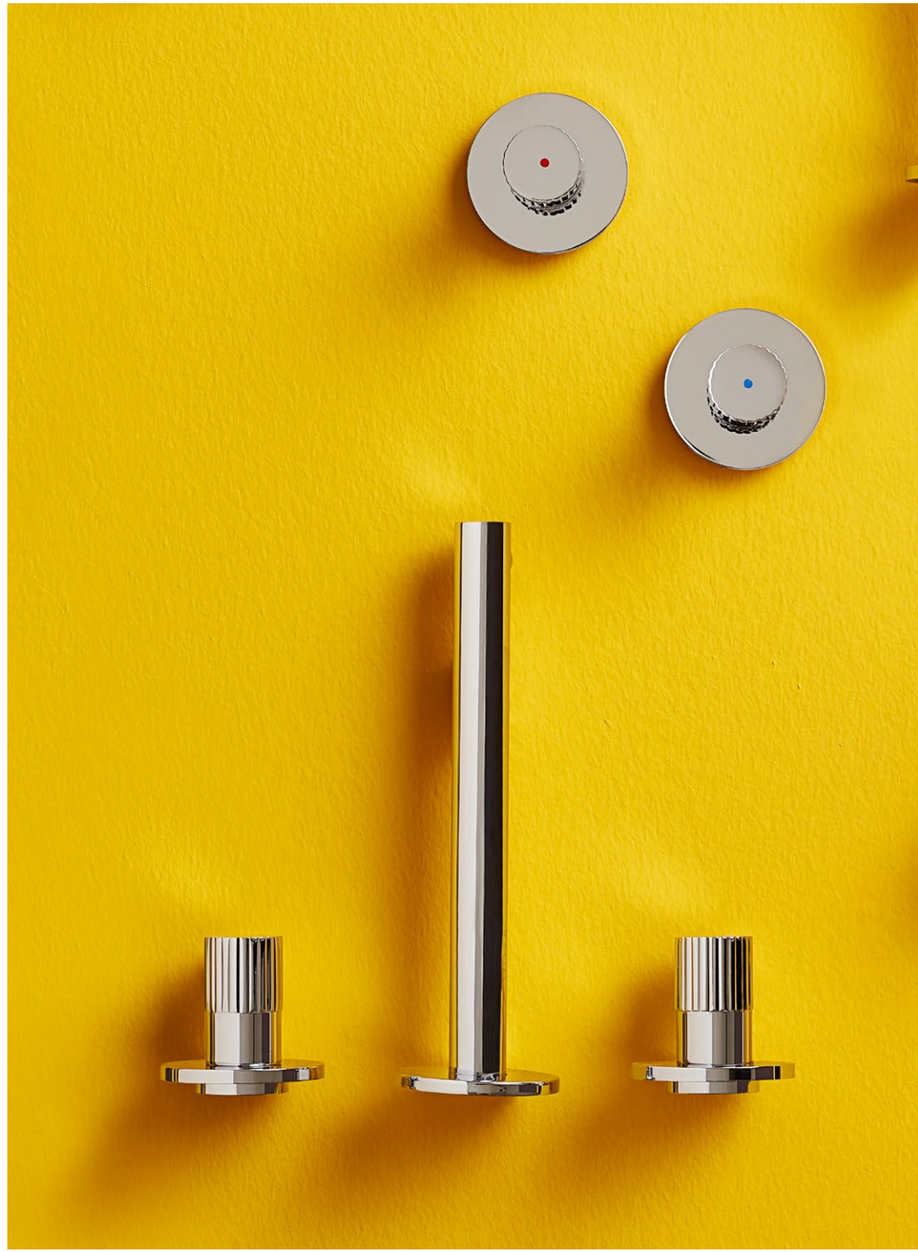

Different elements for an improved shower experience

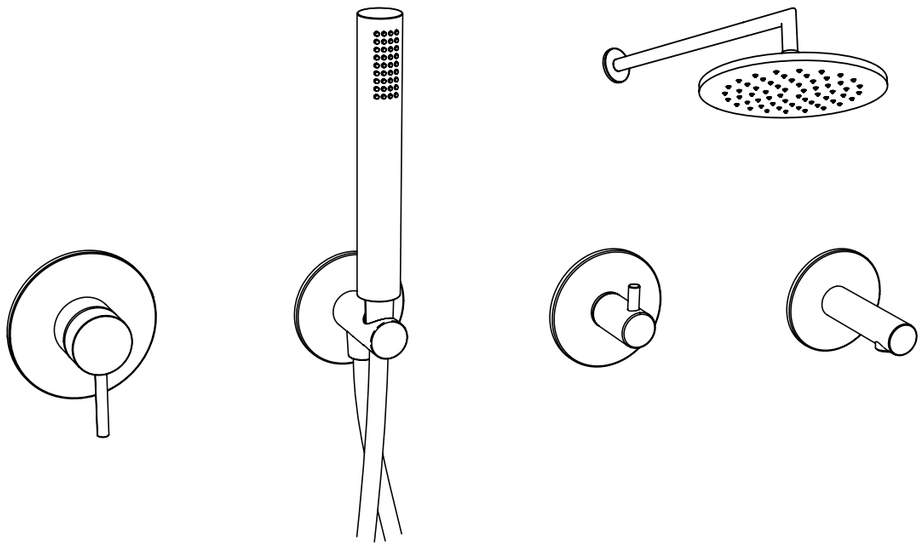

Different combinations

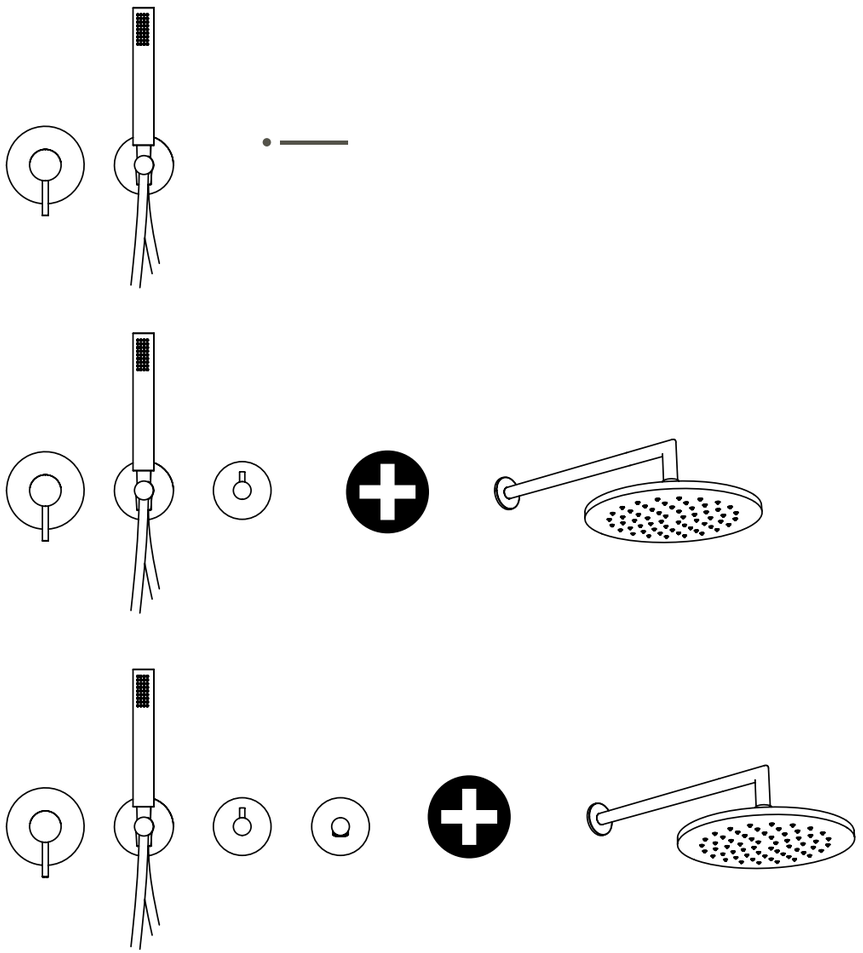

Different accessories

Origin

Design Studio VitrA

VitrA Turkey - Headquarter

Eczacıbaşı Building Products Co.

Büyükdere Cad. Ali Kaya Sok. No: 5
Levent 34394 İstanbul
Phone: +(90 212) 350 80 00
Fax: +(90 212) 350 84 45
www.vitra.com.tr

VitrA Germany

VitrA Bad GmbH

Agrippinawerft 24,
50678 Cologne, Germany
Phone: +49 (0) 221 / 27 73 68-0
Fax: +49 (0) 221 / 27 73 68-500
www.vitra-bad.de

VitrA France

VitrA Bad GmbH

Z.I. Le Poirier - CS 80019
F - 28132 Nogent Le Roi CEDEX
Phone: +33 (0) 2 37 38 69 90
Fax: +33 (0)2 37 51 43 94
www.vitra-bad.fr

VitrA UK

VitrA UK Ltd.
Park 34 Collet Way,
Didcot Oxon Ox11 7WB, UK
Phone: +(44 1235) 750 990
Fax: +(44 1235) 750 985
www.vitra.co.uk

VitrA Russia

Eczacıbaşı Building Products LLC
9, Varshavskoe Highway, Bldg.1
Danilovskaya Manufactory
Block 'Sitsevy', 4 Entr., 1st Floor
Moscow 117105 Russia
Tel.: 007 (495) 221 76 11 (ext. 1101)
www.vitra-russia.ru

VitrA India

Representative Office-India

B-102, Durolite House, Opp. SAB TV
Building, New Link Road, Andheri (West),
Mumbai 400053 India
Phone: +(91) 22-6708 5000
www.vitraglobal.com

VitrA UAE

Representative Office-UAE

Jumeirah Business Centre 5
Unit 1006 Dubai, UAE
Phone: +(971) 52-276-7386
Fax: +(971) 4-457 2467
www.vitraglobal.com

Other Regions

Eczacıbaşı Building Products Co.

Büyükdere Cad. Ali Kaya Sok. No: 5
Levent 34394 İstanbul
Phone: +(90 212) 350 80 00
Fax: +(90 212) 350 84 45
www.vitraglobal.com
Please contact: export@vitra.com.tr

VitrA